SHIMANO 105 Caliper Brake

BR-5600 Silver Version
BR-5600-L Black Version

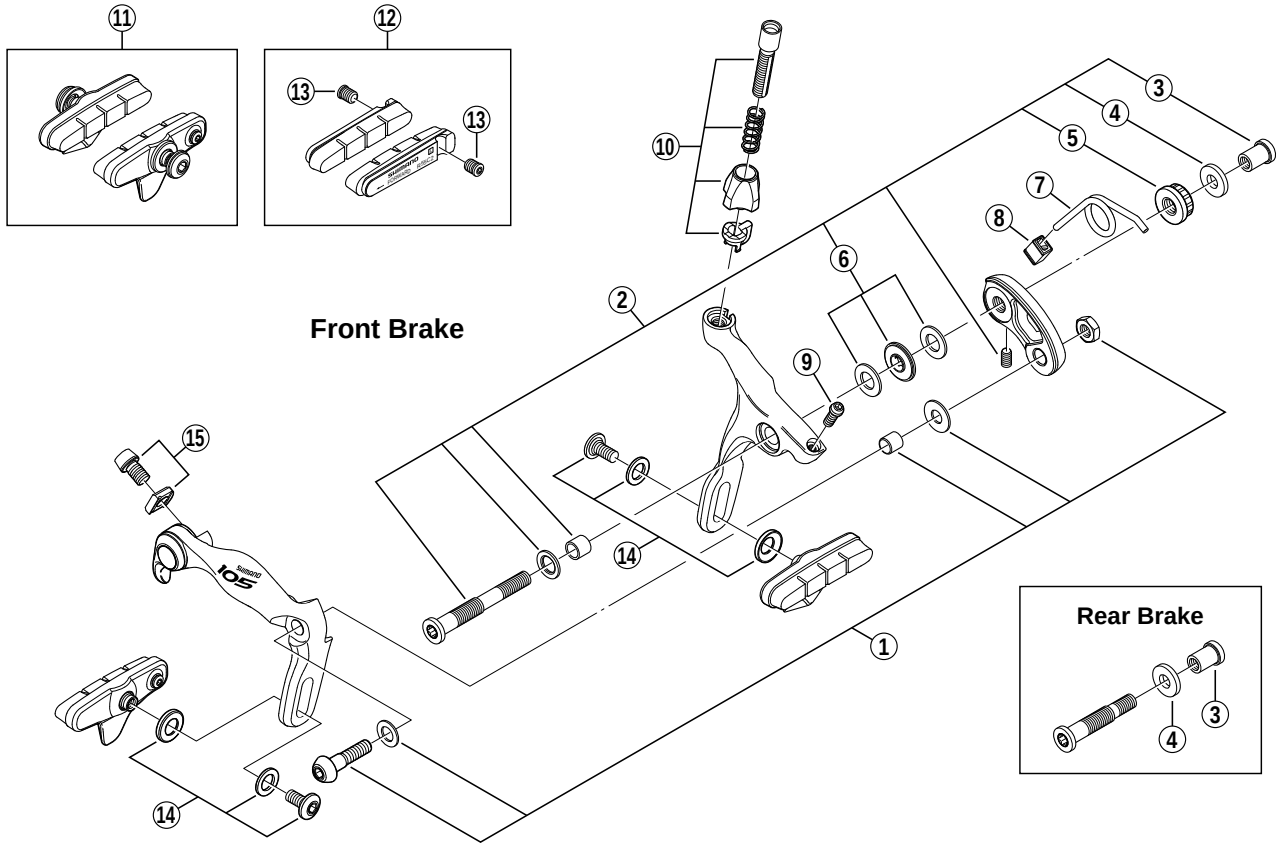

ITEM NO.	SHIMANO CODE NO.	DESCRIPTION	INTERCHANGE-ABILITY BR-6600	BR-5501
1	**Y-8DU98010**	Arm Bolt Unit (M6 x 22.5)		
2	**Y-8DU98020**	Front Pivot Bolt Assembly {Pivot Bolt: 52.5 mm (2-1/16") / Pivot Nut: 10.5 mm}	B	
	Y-8DU98030	Front Pivot Bolt Assembly {Pivot Bolt: 52.5 mm (2-1/16") / Pivot Nut: 12.5 mm}	B	
	Y-8DU98040	Front Pivot Bolt Assembly {Pivot Bolt: 52.5 mm (2-1/16") / Pivot Nut: 18.0 mm}	B	
	Y-8DU98050	Front Pivot Bolt Assembly {Pivot Bolt: 52.5 mm (2-1/16") / Pivot Nut: 27.0 mm}	B	
	Y-8DU98060	Rear Pivot Bolt Assembly {Pivot Bolt: 37.8 mm (1-1/2") / Pivot Nut: 10.5 mm}	B	
*	**Y-8DU98100**	Rear Pivot Bolt Assembly {Pivot Bolt: 37.8 mm (1-1/2") / Pivot Nut: 12.5 mm} for BR-5600	B	
3	**Y-855 75110**	Pivot Nut (10.5 mm) for Front/Rear	A	A
	Y-855 75020	Pivot Nut (12.5 mm) for Front/Rear	A	A
	Y-855 74010	Pivot Nut (18.0 mm) for Front	A	A
	Y-8A0 23000	Pivot Nut (27.0 mm) for Front	A	
4	**Y-858 50100**	Spacer-R (2 mm)	A	A
5	**Y-8DD04100**	Lock Nut (M7)	B	
6	**Y-84B 98050**	Ball Retainer Unit (φ7)	A	A
7	**Y-8DD05000**	Arm Spring	A	
8	**Y-84B 11000**	Sleeve		A
9	**Y-81U 10100**	EC-Bolt (M4 x 12.5)	B	
10	**Y-8DD98080**	Cable Adjusting Bolt Unit	A	
* 11	**Y-8DU98070**	R55C2 Cartridge-Type Brake Shoe Set (Pair/Silver) for BR-5600	B	
	Y-8FP 98010	R55C2 Cartridge-Type Brake Shoe Set (Pair/Black) for BR-5600-L	B	
12	**Y-8A0 98020**	R55C2 Cartridge-Type Brake Shoes & Fixing Bolts (Pair)	B	
13	**Y-8FA 17000**	Fixing Bolt (M4 x 5.5)	B	B
14	**Y-8DU98080**	Shoe Fixing Bolt Unit (M5 x 11.2)	B	
15	**Y-8DU98090**	Cable Fixing Bolt (M6 x 8.5) & Plate		

A: Same parts.
B: Parts are usable, but differ in materirals, appearance, finish, size, etc.
Absence of mark indicates non-interchangeability.

0802-2442B

Specifications are subject to change without notice.

SHIMANO