Disc Brake

BR-RS805 Brake Caliper SM-BH59 Brake Hose SM-RT99 Disc Rotor

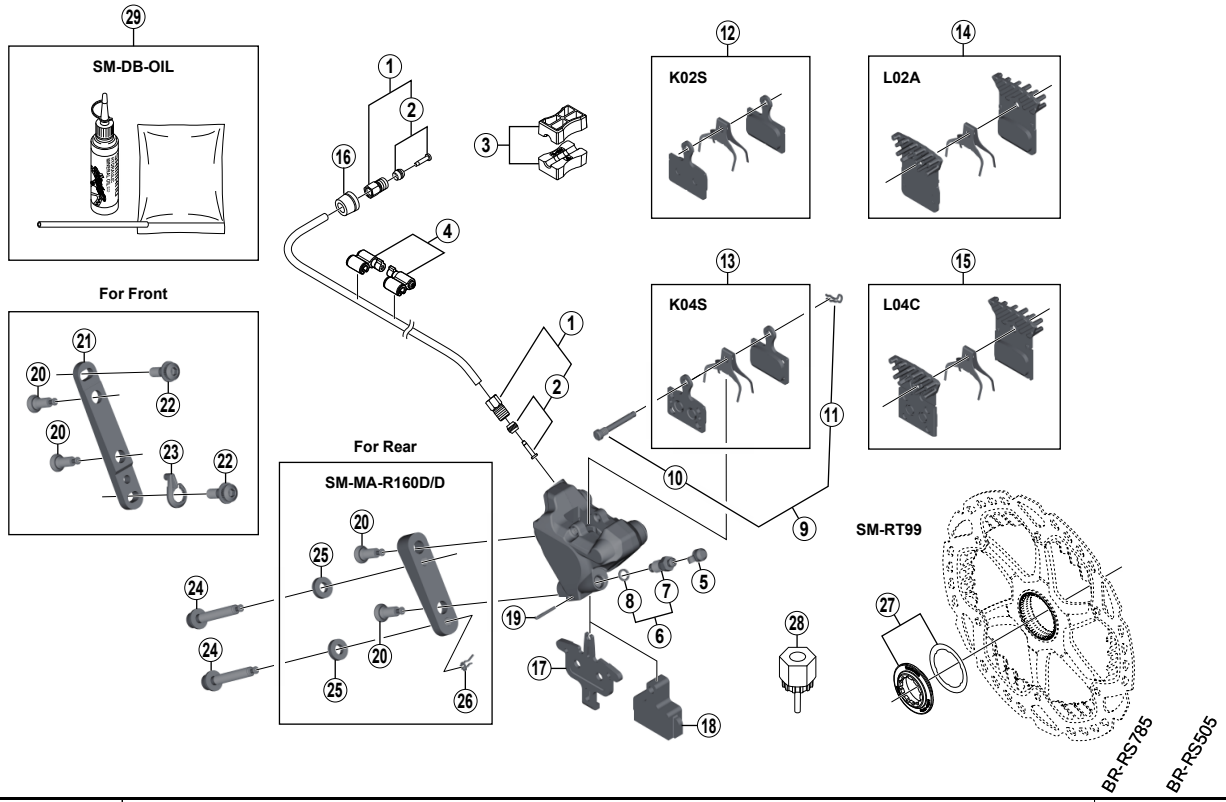

ITEM NO.	SHIMANO CODE NO.	DESCRIPTION	INTERCHANGE-ABILITY		
1	**Y8AL98020**	Connecting Bolt Unit	A	A	
2	**Y8H298040**	Olive & Connecter Insert	A	A	
3	**Y8H198030**	TL-BH61 Shimano original tool (2 pcs.)	A	A	
4	**Y83098040**	SM-HANG Hose Supporter A & B	A	A	
5	**Y8B214000**	Bleed Nipple Cap		A	
6	**Y8CL98050**	Bleed Nipple & Seal Ring		A	
7	**Y8CL24000**	Bleed Nipple		A	
8	**Y8B511001**	O-Ring for Bleed Nipple	A	A	
9	**Y8J798060**	Pad Axle & Snap Retainer	A	A	
10	**Y8J710000**	Pad Axle	A	A	
11	**Y8J716000**	Snap Retainer	A	A	
12	**Y8N398010**	Resin Pad (K02S) & Spring		A	
13	**Y8N398020**	Metal Pad (K04S) & Spring		A	
14	**Y8N398030**	Resin Pad (L02A) w/Fin & Spring		A	
15	**Y8N398040**	Metal Pad (L04C) w/Fin & Spring		A	
16	**Y8H802000**	Hose Cover for easy hose joint system, not used with easy hose joint direct system			
17	**Y8N218000**	Pad Spacer		A	
18	**Y8N219000**	Bleeding Spacer		A	
19	**Y8N207000**	Bolt Fixing Pin		A	
20	**Y8N206000**	Caliper Fixing Bolt B		A	
21	**Y8N230000**	Front Caliper Mount Bracket		A	
22	**Y8N204000**	Caliper Fixing Bolt A		A	
23	**Y8N205000**	Snap Ring		A	
24	**Y8N208000**	Caliper Fixing Bolt C (10 mm)		A	
	Y8N208050	Caliper Fixing Bolt C (15 mm)		A	
	Y8N208010	Caliper Fixing Bolt C (20 mm)		A	
	Y8N208020	Caliper Fixing Bolt C (25 mm)		A	
	Y8N208030	Caliper Fixing Bolt C (30 mm)		A	
	Y8N208040	Caliper Fixing Bolt C (35 mm)		A	
25	**Y8NU02000**	Washer for R160 Adapter		A	
26	**Y8NU03000**	Snap Retainer		A	
27	**Y8K198010**	Lock Ring & Washer	A	A	
28	**Y12009230**	TL-LR15 Lock Ring Removal Tool	A	A	
29	**Y83998010**	Mineral Oil Bleed Kit (50 ml)	A	A	

A: Same parts.

B: Parts are usable, but differ in materials, appearance, finish, size, etc.

Absence of mark indicates non-interchangeability.

Jun.-2015-3852

© Shimano Inc. I

Specifications are subject to change without notice.

SHIMANO